Electrolux PROFESSIONAL

Food slicers
250 mm Gravity Slicer, belt transmission

ITEM #

MODEL #

NAME #

SIS #

AIA #

601130 (MSG25B) Gravity Slicer 250mm, belt transmission (230V; 1+N; 50)

Short Form Specification

Item No.

Medium duty slicer for Hotel and Catering
Base and main components in high polished satin finished anodized aluminium for long lasting, hygiene and ease of cleaning. The blade is in hollow ground hard chrome with blade guard ring for added protection. Model equipped with cut thickness adjusting knob, top mounted sharpener, cover blade and product deflector - easily removable for cleaning. Ventilated blade drive motor. Poly V-belt drive system for quiet operation and economical service. Removable carriage system permanently lubrificated with automatic clutch. IP42 water protection.
Supplied with blade removal tool.

APPROVAL:

Main Features

- Manual gravity slicer.
- Slice thickness from 0 to 15 mm.
- Cut thickness-adjusting knob (millimeter adjustment).
- Belt driven transmission.
- Ventilated blade drive motor designed for continuous use, with Poly V-belt drive system for quiet operation and economical service.
- Removable carriage system permanently lubrificated with automatic clutch.
- Top-mounted stone blade sharpener and cover blade easy to remove.
- Supplied with blade removal tool.
- Highest degree of safety in functioning, cleaning and maintenance.
- Cutting capacity for 250 mm model:
  -square: 160x160
  -rectangular: 220x145
  -round: 170

Construction

- Compact design.
- Made in high polished satin finished anodized aluminium. This procedure guarantees high hygienic standards of the parts interested by the cut and resistance to acids, salts and oxidation processes.
- The blade is made of hollow ground hard chrome with blade guard ring for added protection.
- Plexiglass safety hand guard as standard.
- IP42 water protection.

Food slicers
250 mm Gravity Slicer, belt transmission

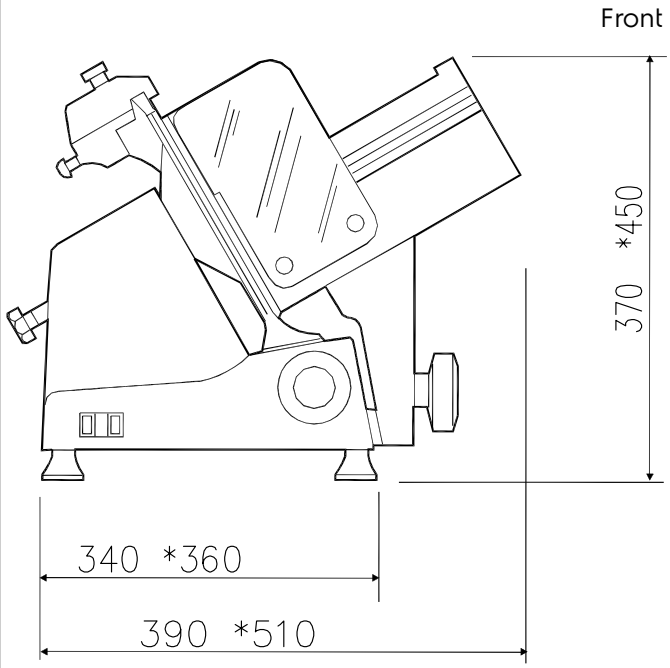

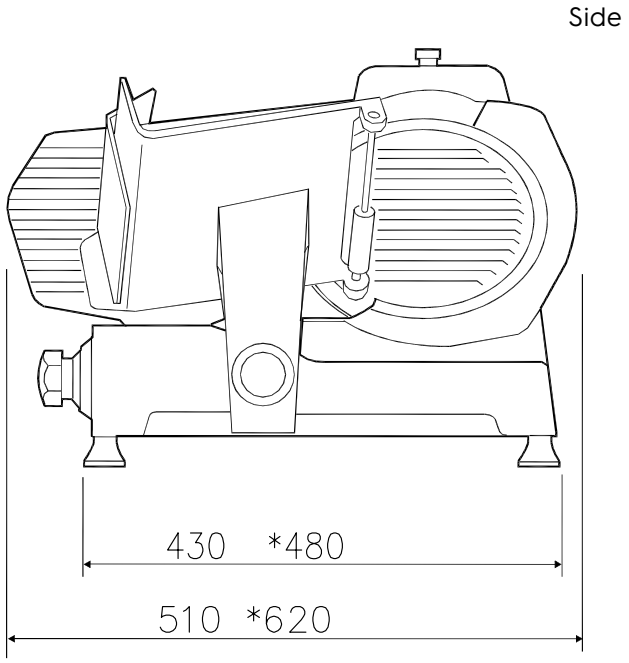

EI = Electrical inlet (power)

Electric

Supply voltage:	
601130 (MSG25B)	230 V/1N ph/50 Hz
Total Watts:	0.19 kW

Key Information:

External dimensions, Width:	510 mm
External dimensions, Depth:	420 mm
External dimensions, Height:	370 mm
Net weight (kg):	22

The company reserves the right to make modifications to the products without prior notice. All information correct at time of printing.

2024.10.06